# Installation Manual

## Universal Top-of-Pole Mount

## UNI-TP/04

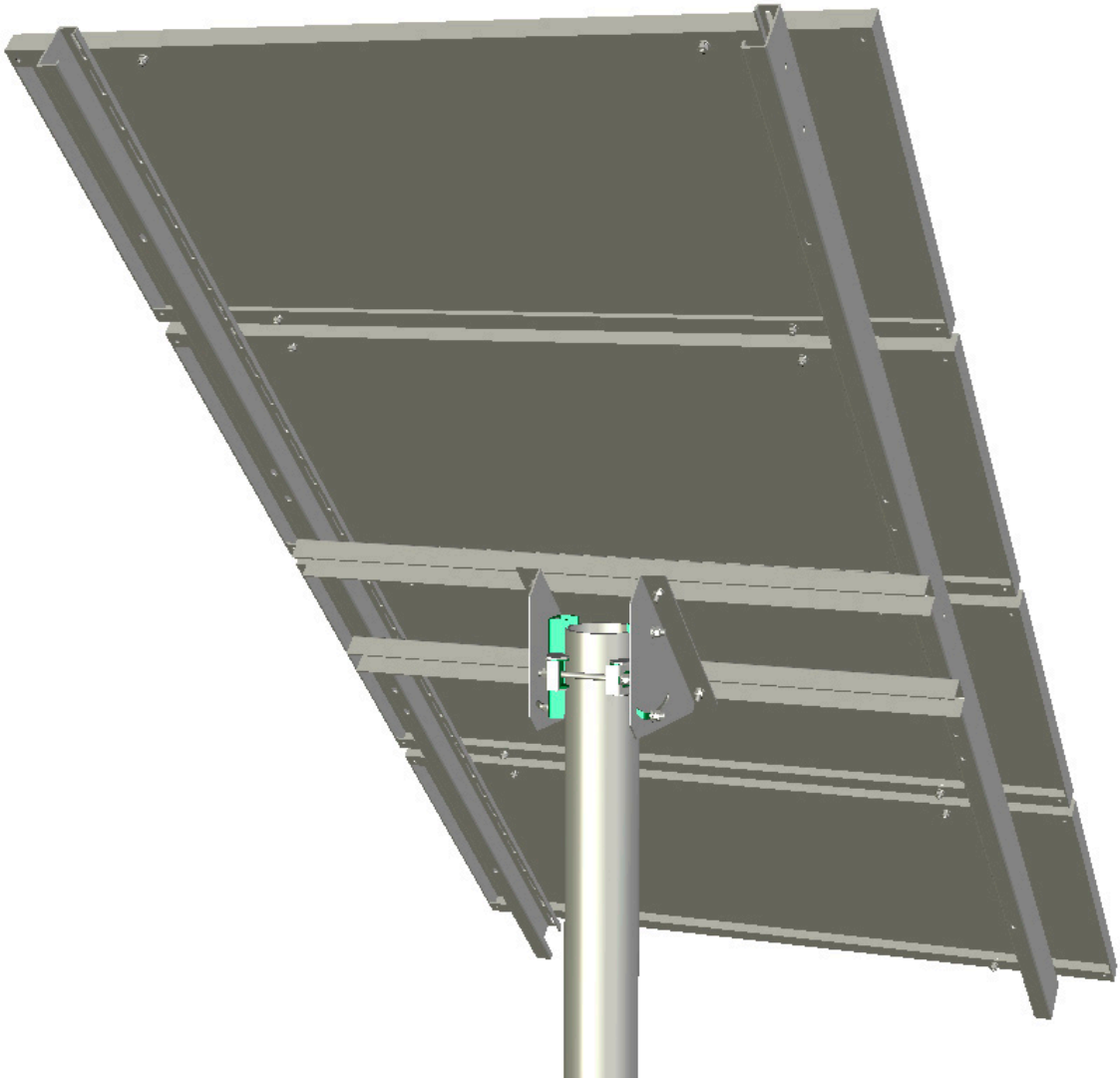

IRONRIDGE

**Solar Mounting Solutions**


© 2008 IronRidge, Inc. All Rights Reserved

# Introduction

The Universal Top-of-Pole Mount UNI-TP/04 is a very sturdy and straightforward pole mounting solution for small area solar photo voltaic (PV) needs. With its user-adjustable angle settings, it can support installations in a wide range of locations.

In addition, the UNI-TP/04 supports:

- Up to three PV panels with a combined width of up to 90 inches.
- A pole diameter of 4.0 inches (requires a properly anchored schedule 40 pipe).

# 1. Installer Responsibility

The installer is solely responsible for:

- Complying with all applicable local or national building codes, including any that may supersede this manual
- Ensuring that IronRidge and other products are appropriate for the particular installation and the installation environment
- Ensuring that the selected mount can support the array under live load conditions
- Using only IronRidge parts and installer-supplied parts as specified by IronRidge. Substitution parts may void the warranty
- Ensuring safe installation of all electrical aspects of the PV array.

# 2. Customer Support

IronRidge makes every effort to ensure your mounting kit is easy to install. If you need assistance at any point with your installation or have suggestions on how we can improve your experience, call IronRidge customer support: (800) 227-9523

# 3. Tools Required For Assembly

The following tools are required to assemble the Universal Top-of-Pole Mount:

| Tool | Use for |
|---|---|
| Wrenches<br>Open-end wrench, Box-end wrench, or 3/8" or greater socket drive with sockets to support the following size hex heads:<br>◆ 3/8"<br>◆ 5/16"<br>◆ 1/4" | ◆ 3/8 cap-end screws, 3/8 bolts<br>◆ 5/16 cap-end screws, 5/16 bolts<br>◆ 1/4 cap-end screws, 1/4 bolts |

# 4. Component List

The Universal Top-of-Pole Mount UNI-TP/04 kit contains the following parts:

**Brace Assembly (51-0626-300) x2**

Attaches to the top of the 4-inch pole, providing the foundation for the mount

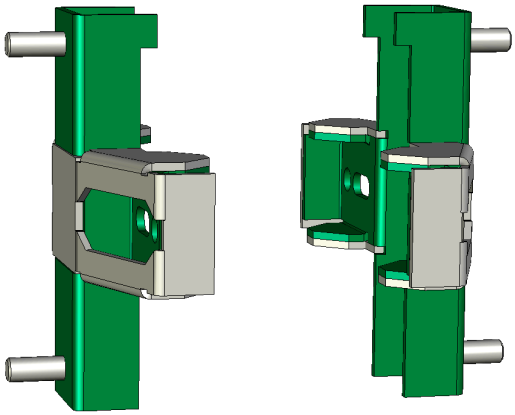

**Tilt Plate, left (51-0627-018) and right (51-0627-018A)**

Attaches to the brace, providing tilt adjustment for the panel assembly

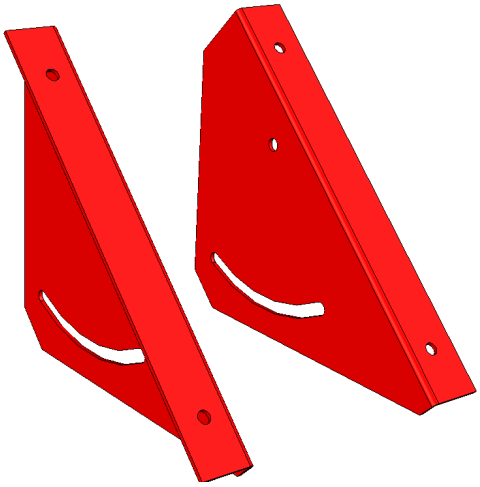

**Cross Rail (51-0627-016) x2**

Attaches to the tilt plates and support the channel rails

**Channel rail (51-0590-001) x2**

Attaches directly to the back of the PV modules

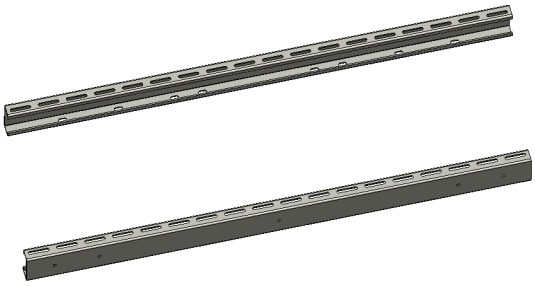

**Component List continued...**

| Part | Qty | Part Number |
|---|---|---|
| 5/16 x 1" Kit | 1 | 29-5006-005 |
| 5/16-18 x 1" SS hex-cap bolt | 4 | 23-3118-021 |
| 5/16 flat washer, SS | 8 | 25-3102-000 |
| 5/16 split lock washer, SS | 4 | 25-3101-000 |
| 5/16 hex nut, SS | 4 | 25-3118-440 |
| Small Pole Bracket Kit | 1 | 29-5008-001 |
| Stud, 3/8-16 x 6" SS | 2 | 27-1037-016 |
| 3/8 flat washer, Zinc | 4 | 27-3702-001 |
| 3/8 split lock washer, Zinc | 4 | 27-3701-001 |
| 3/8 hex nut, Zinc | 4 | 24-3716-441 |
| Small Tilt Plate Kit | 1 | 29-5007-000 |
| 3/8 flat washer, Zinc | 4 | 27-3702-001 |
| 3/8 split lock washer, Zinc | 4 | 27-3701-001 |
| 3/8 hex nut, Zinc | 4 | 24-3716-441 |
| Cross Rail Kit | 1 | 29-5010-000 |
| 5/16-18 x 2.50" hex-cap bolt, Zinc | 4 | 23-3118-901 |
| 5/16 flat washer, Zinc | 4 | 25-3102-001 |
| 5/16 med split lock washer, Zinc | 4 | 25-3101-001 |
| 5/16-18 fin hex nut, Zinc | 4 | 24-3118-441 |
| Spare Pole Kit | 1 | 29-5002-100 |
| 1/4-20 x 3/4" SS hex-cap bolt | 4 | 23-2520-050 |
| 1/4 flat washer, SS | 4 | 25-2502-000 |
| 1/4 split lock washer, SS | 4 | 24-2501-000 |
| 1/4-20 fin hex nut, SS | 4 | 24-2520-440 |
| 1/4 x 3/4" Kit | 4 | 29-5000-000 |
| 1/4-20 x 3/4" SS hex-cap bolt | 16 | 23-2520-050 |
| 1/4 flat washer, SS | 16 | 25-2502-000 |
| 1/4 split lock washer, SS | 16 | 24-2501-000 |
| 1/4-20 fin hex nut, SS | 16 | 24-2520-440 |

# 5. Assembly

## Step 1 -attaching the channel rails to the PV modules

| Parts Required | Qty | Part Number |
|---|---|---|
| PV Module | 3-4 | User-supplied |
| Channel Rail | 2 | 51-0590-001 |
| 1/4-20 x 3/4" SS hex-cap bolt | 12 | 23-2520-050 |
| 1/4 flat washer, SS | 12 | 25-2502-000 |
| 1/4 split lock washer, SS | 12 | 24-2501-000 |
| 1/4-20 fin hex nut, SS | 12 | 24-2520-440 |

1. Lay the modules face down on a protected surface in the appropriate orientation. Leave an inch or two between the panels.
2. Lay the channel rails on the back of the modules with the evenly-spaced holes down, so the flat side of the rails are facing towards the outside edges of the panels.

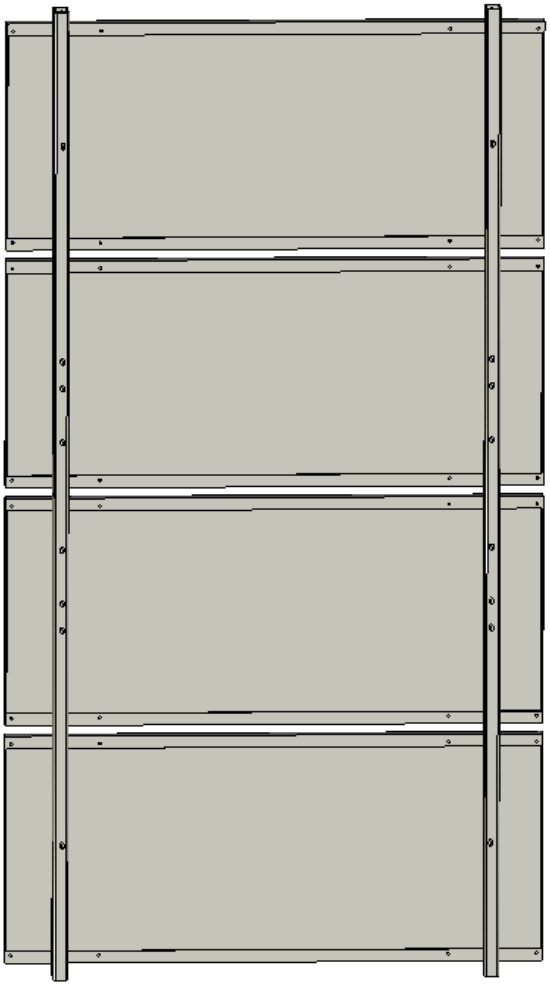

3. Secure the rails with a bolt, lock washer and hex nut in each of the PV mounting holes.

   Tighten the bolts to 7 ft-lbs.

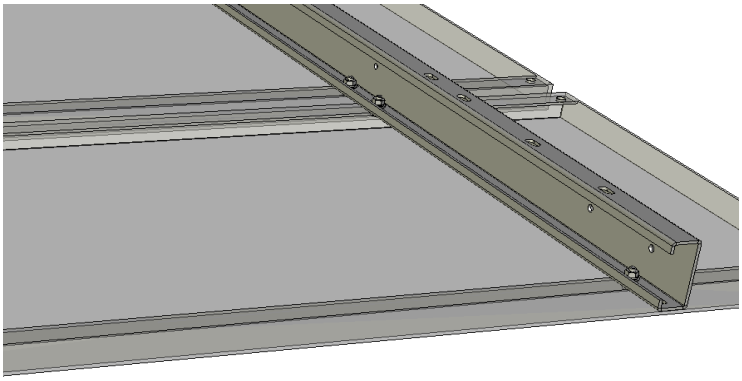

## Step 2 - attaching the brace assembly to the pole

| Parts Required | Qty | Part Number |
|---|---|---|
| Brace Assembly | 2 | 51-0626-300 |
| Stud, 3/8-16 x 6" SS | 2 | 27-1037-016 |
| 3/8 flat washer, Zinc | 4 | 27-3702-001 |
| 3/8 split lock washer, Zinc | 4 | 27-3701-001 |
| 3/8 hex nut, Zinc | 4 | 24-3716-441 |

4. Place the brace assembly onto the pole so the "lip" catches the top of the pole.
5. Install the studs and hardware as shown, using a washer and lock washer under each nut.
6. Tighten the stud nuts evenly, making sure that both studs are tightened the same amount so the distance between braces is the same on the front and the back.

   Also, make sure that the nuts are approximately an equal number of threads in on the studs, so that the protruding part of the stud doesn't stick out too far.
7. Tighten the studs to 12 ft-lbs.

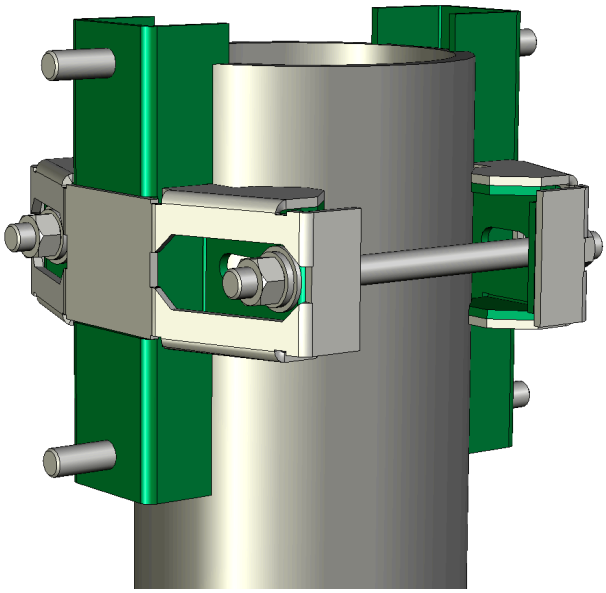

# Step 3 - attaching the tilt plates to the brace

| Parts Required | Qty | Part Number |
|---|---|---|
| Tilt Plate, left | 1 | 51-3517-243 |
| Tilt Plate, right | 1 | 51-3517-244 |
| 3/8 flat washer, Zinc | 4 | 27-3702-001 |
| 3/8 split lock washer, Zinc | 4 | 27-3701-001 |
| 3/8 hex nut, Zinc | 4 | 24-3716-441 |

8. Place the tilt plates on the brace assembly as shown.
9. Use a washer, lock washer and nut on each screw, and finger-tighten.

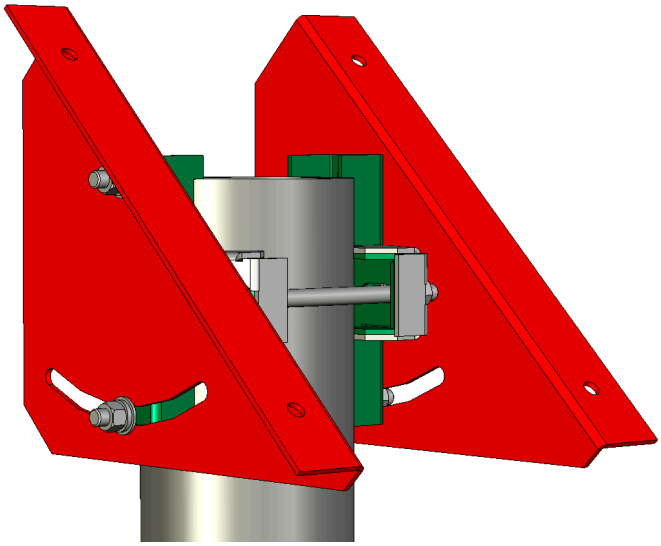

# Step 4 - attaching the cross rails to the tilt plates

| Parts Required | Qty | Part Number |
|---|---|---|
| Cross Rail | 2 | 27-0627-016 |
| 5/16-18 x 2.50" hex-cap bolt, Zinc | 4 | 23-3118-901 |
| 5/16 flat washer, Zinc | 8 | 25-3102-001 |
| 5/16 med split lock washer, Zinc | 4 | 25-3101-001 |
| 5/16-18 fin hex nut, Zinc | 4 | 24-3118-441 |

**10.** Place the cross rails on the tilt plates with the open side facing down and attach using the specified hardware.

**11.** Tighten the bolts to 12 ft-lbs.

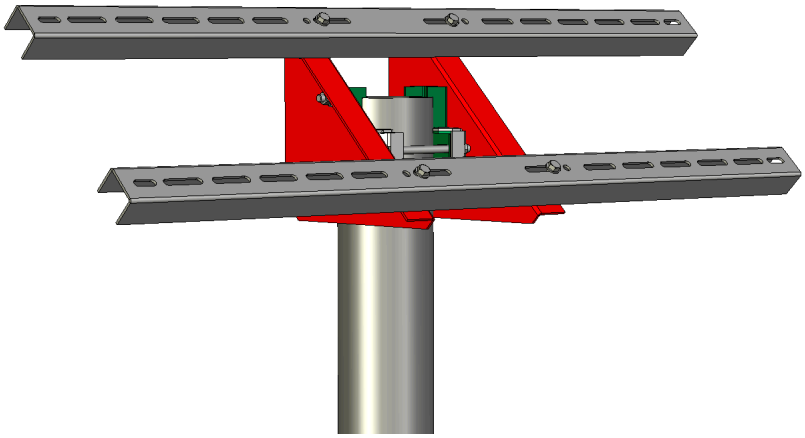

# Step 5 - mounting the PV assembly

| Parts Required | Qty | Part Number |
|---|---|---|
| 5/16-18 x 1" SS hex-cap bolt | 4 | 23-3118-021 |
| 5/16 flat washer, SS | 8 | 25-3102-000 |
| 5/16 split lock washer, SS | 4 | 25-3101-000 |
| 5/16 hex nut, SS | 4 | 25-3118-440 |

**12.** Lift the PV array assembly onto the cross rails and attach using the supplied hardware.

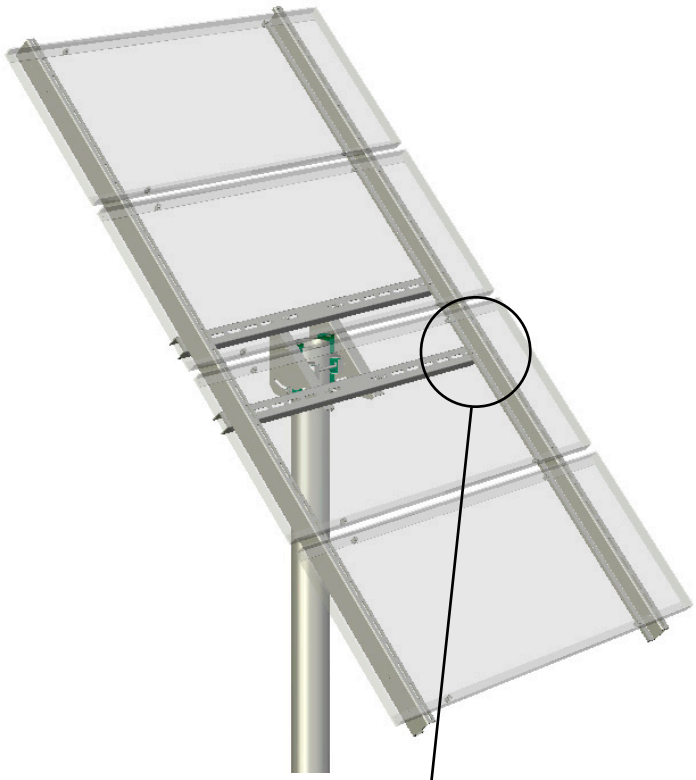

**13.** Tighten the bolts to 12 ft-lbs.

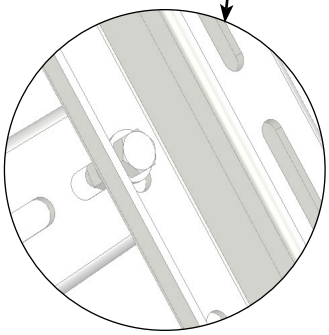

**14.** Adjust the tilt of the panel, then tighten the tilt plate nuts to 12 ft-lbs.

# IronRidge 20-Year Warranty

IronRidge warrants each Mounting Structure to be free from defects in materials and workmanship for twenty years from the date of first purchase when installed properly and used for the purpose for which it is designed. The warranty covers the replacement cost of parts to repair the product to proper working condition. Transportation and incidental costs associated with warranty items are not reimbursable. The warranty does not cover normal wear, or damage resulting from misuse, abuse, improper installation, negligence, or accident. Furthermore, it does not cover units that have been altered, modified or repaired without written authorization from the manufacturer or its authorized representative, or units used in a manner or for a purpose other than that specified by the manufacturer.